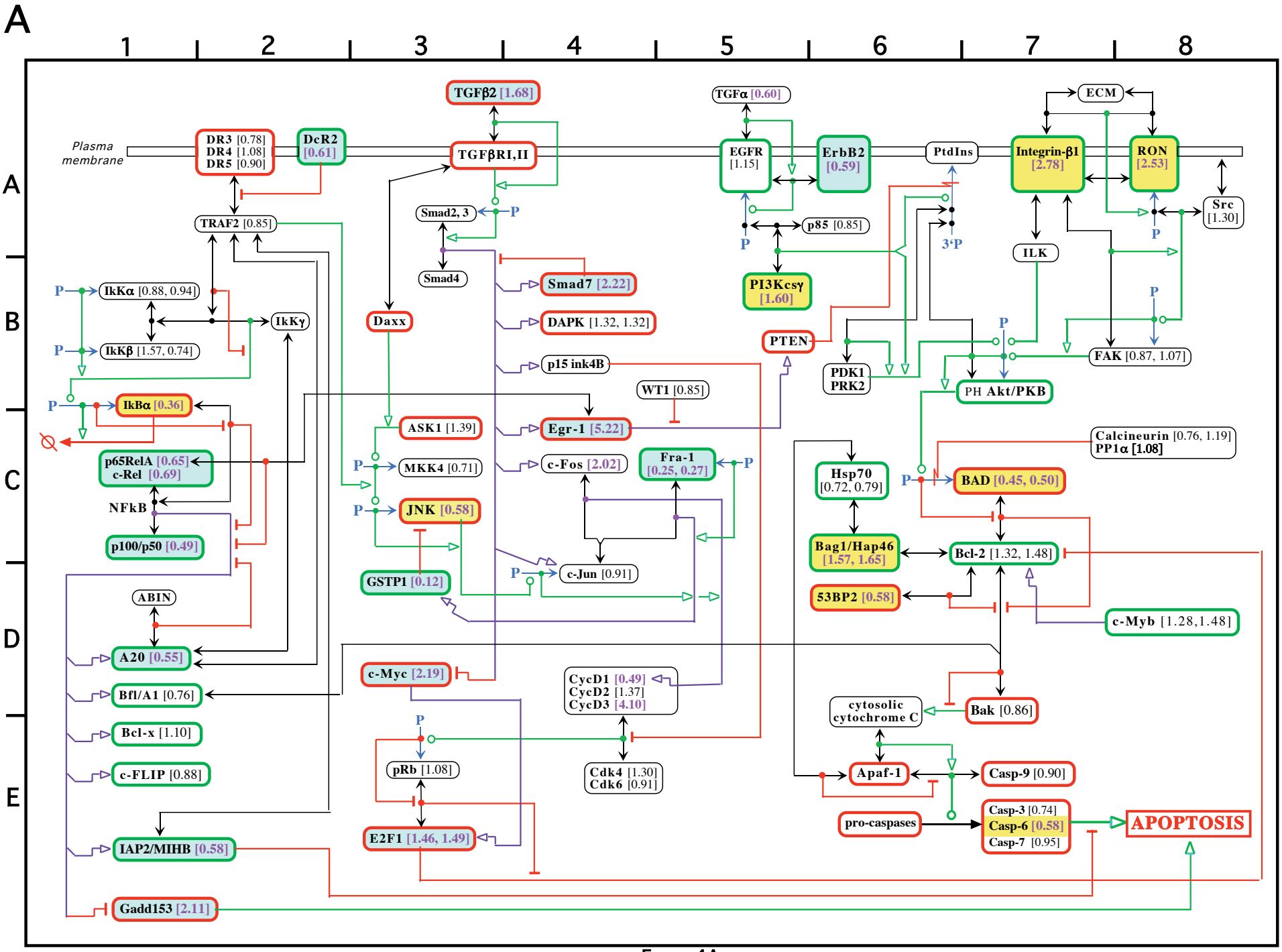
A
1
2
3
4
5
6
7
8
A
B
C
D
E
Plasma membrane
DR3 [0.78]
DR4 [1.08]
DR5 [0.90]
DcR2 [0.61]
TGFβ2 [1.68]
TGFβRI,II
TGFα [0.60]
EGFR [1.15]
ErbB2 [0.59]
PtdIns
ECM
Integrin-β1 [2.78]
RON [2.53]
Src [1.30]
TRAF2 [0.85]
Smad2, 3
Smad4
p85 [0.85]
PI3Kcsγ [1.60]
3'P
ILK
IkKα [0.88, 0.94]
IkKβ [1.57, 0.74]
IkKγ
Daxx
Smad7 [2.22]
DAPK [1.32, 1.32]
p15 ink4B
PTEN
PDK1
PRK2
PH Akt/PKB
FAK [0.87, 1.07]
IkBα [0.36]
WT1 [0.85]
ASK1 [1.39]
Egr-1 [5.22]
Calcineurin [0.76, 1.19]
PP1α [1.08]
p65RelA [0.65]
c-Rel [0.69]
MKK4 [0.71]
c-Fos [2.02]
Fra-1 [0.25, 0.27]
Hsp70 [0.72, 0.79]
BAD [0.45, 0.50]
NFkB
JNK [0.58]
p100/p50 [0.49]
Bag1/Hap46 [1.57, 1.65]
Bcl-2 [1.32, 1.48]
GSTP1 [0.12]
c-Jun [0.91]
53BP2 [0.58]
c-Myb [1.28,1.48]
ABIN
A20 [0.55]
c-Myc [2.19]
CycD1 [0.49]
CycD2 [1.37]
CycD3 [4.10]
Bfl/A1 [0.76]
cytosolic cytochrome C
Bak [0.86]
Bcl-x [1.10]
pRb [1.08]
Cdk4 [1.30]
Cdk6 [0.91]
c-FLIP [0.88]
Apaf-1
Casp-9 [0.90]
pro-caspases
Casp-3 [0.74]
Casp-6 [0.58]
Casp-7 [0.95]
APOPTOSIS
E2F1 [1.46, 1.49]
IAP2/MIHB [0.58]
Gadd153 [2.11]
P

FIGURE 4A