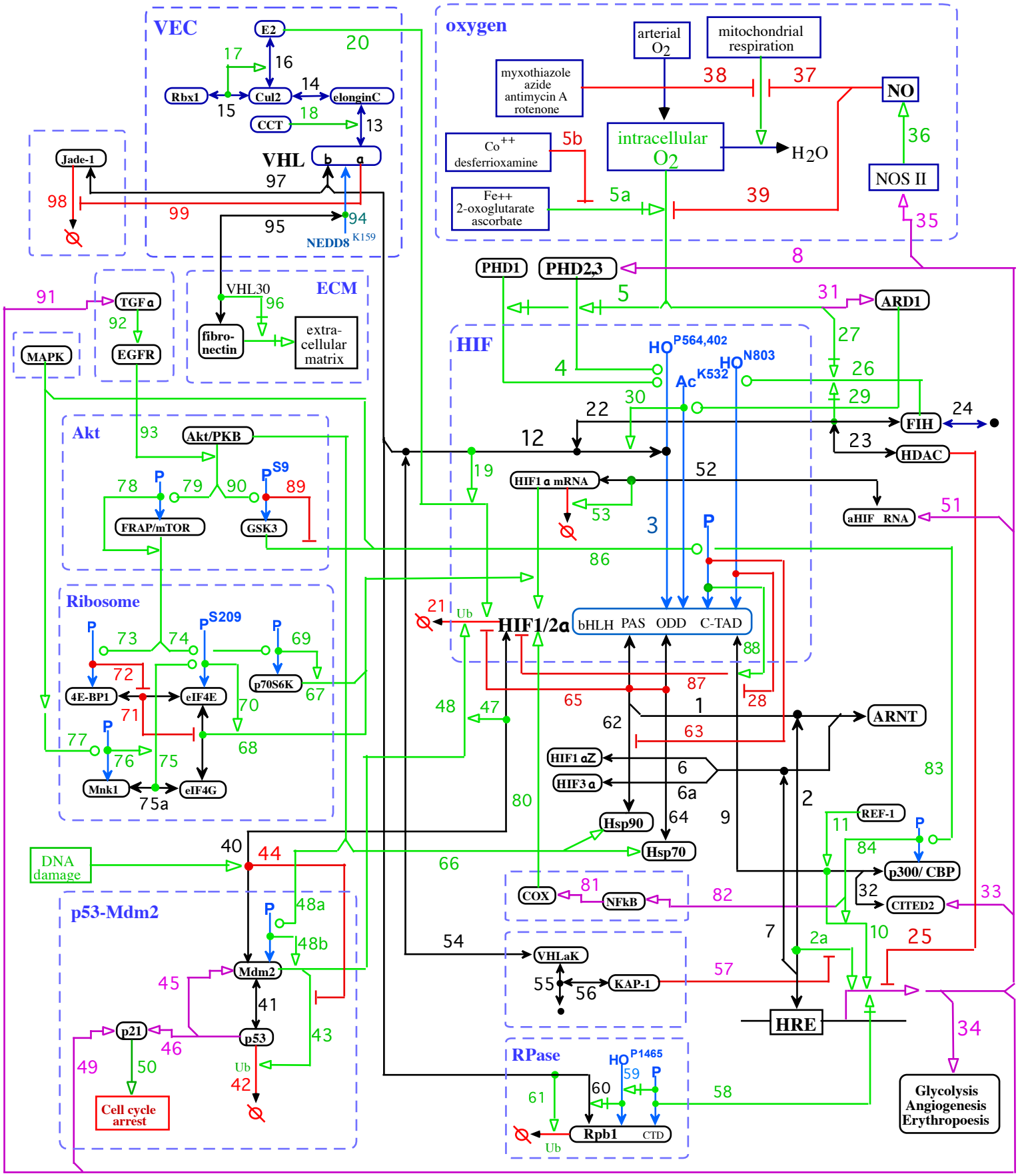
VEC
E2
Rbx1
Cul2
elonginC
CCT
VHL
b
a
Jade-1
NEDD8
K159
oxygen
arterial O2
mitochondrial respiration
myxothiazole azide antimycin A rotenone
NO
Co++ desferrioxamine
intracellular O2
H2O
NOS II
Fe++ 2-oxoglutarate ascorbate
PHD1
PHD2,3
ARD1
ECM
VHL30
fibro-nectin
extra-cellular matrix
TGF α
EGFR
MAPK
HIF
HO P564,402
HO N803
Ac K532
FIH
HDAC
Akt
Akt/PKB
FRAP/mTOR
GSK3
S9
HIF1 α mRNA
aHIF RNA
Ribosome
S209
4E-BP1
eIF4E
p70S6K
Mnk1
eIF4G
HIF1/2α
bHLH PAS ODD C-TAD
Ub
ARNT
HIF1 αZ
HIF3 α
Hsp90
Hsp70
REF-1
p300/ CBP
CITED2
DNA damage
COX
NFkB
VHLaK
KAP-1
HRE
p53-Mdm2
Mdm2
p53
p21
Cell cycle arrest
RPase
HO P1465
Rpb1 CTD
Glycolysis
Angiogenesis
Erythropoesis